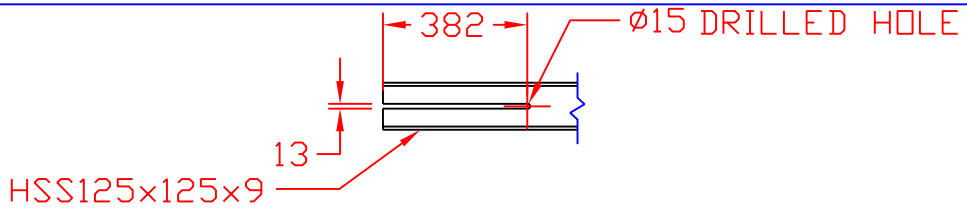

TYPICAL BRACE SLOT DETAIL
SCALE: 1mm = 20mm

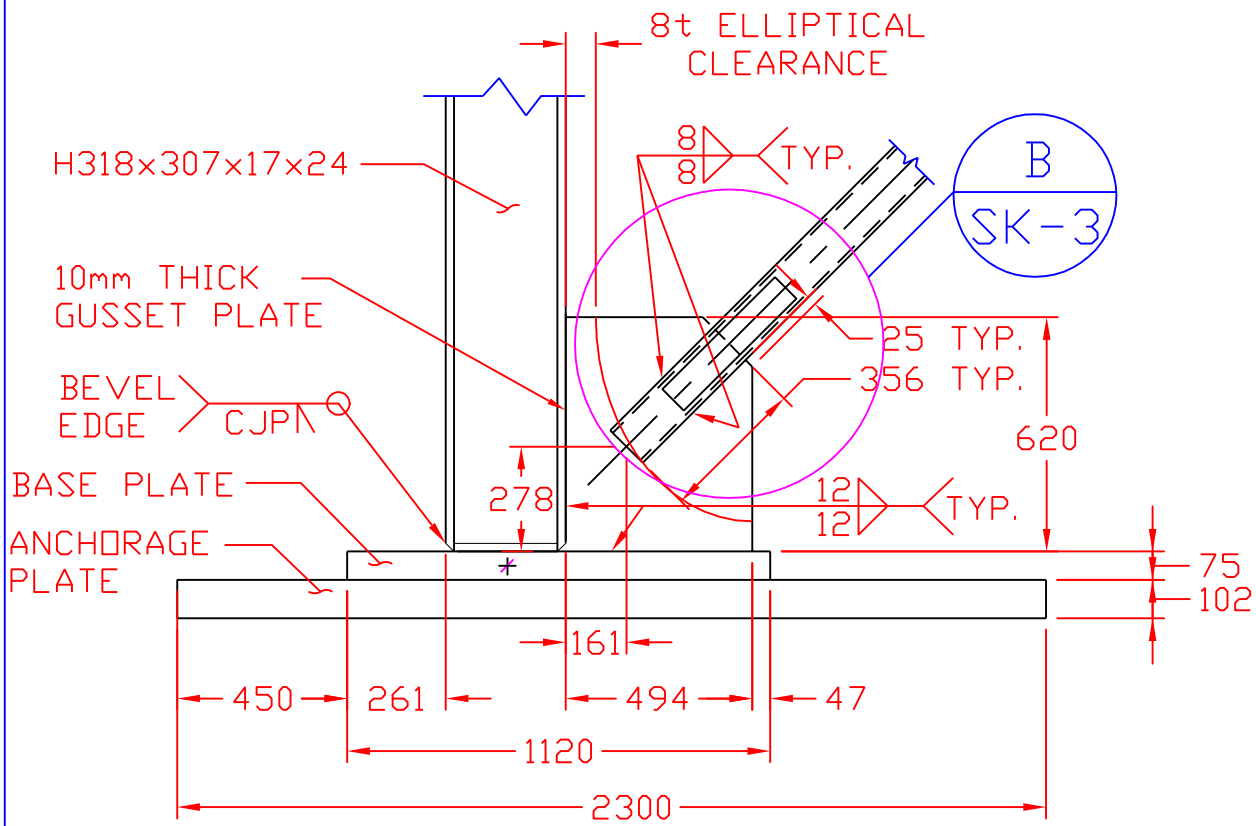

A
SK-3

EAST BASE PLATE AND GUSSET DETAIL
SCALE: 1mm = 20mm

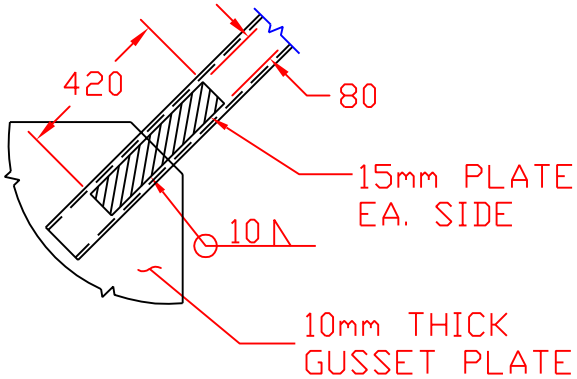

B
SK-3

NET SECTION REINF.
SCALE: 1mm = 20mm

NOTES:

ALL PLATE STEEL A572 OR EQUIVALENT

ALL ROLLED SHAPES TO BE A992 OR EQUIVALENT

BRACE TO BE A500 B/C OR EQUIVALENT.

ALL WELDS TO SATISFY AISC DEMANDS CRITICAL AWS E71T8 OR EQUIVALENT

TCBF1 – TOMORROW'S CONCENTRIC BRACED FRAME 1

NEES/SG NCREE BRACED FRAME TEST

DRAWN BY: KAC
DESIGNED BY: JAP
CHECKED BY: KAC
DATE: SEPTEMBER 7, 2007
CONTACT: CROEDER@U.WASHINGTON.EDU

DWG: SK-3